成 品 图

注:带▲为需管控尺寸

REV.	ECN NO.	DATE

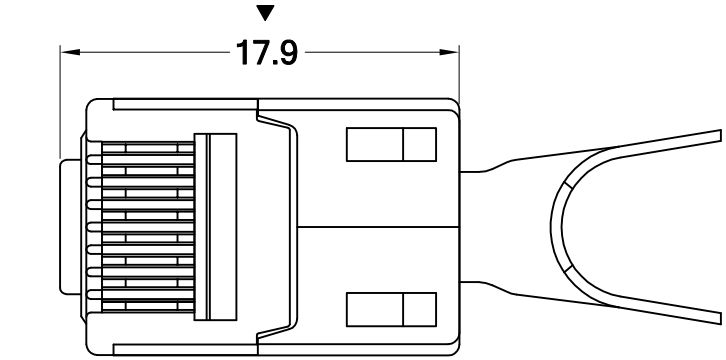

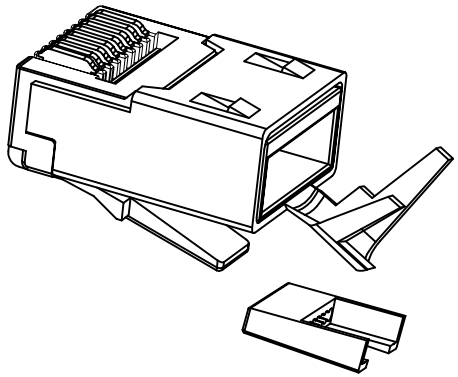

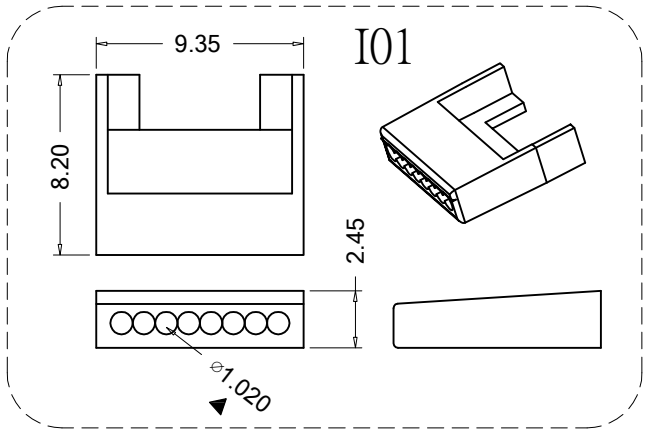

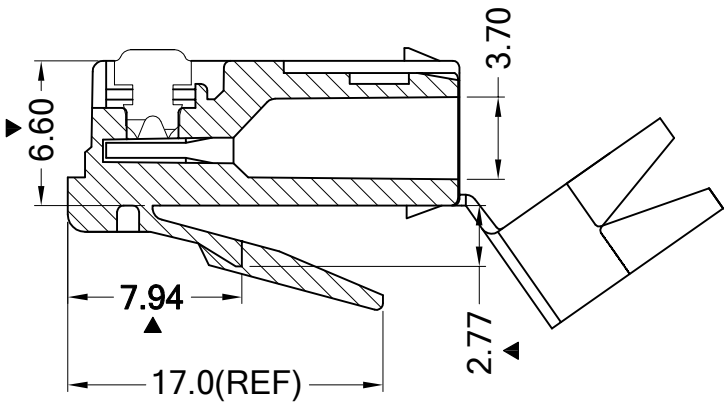

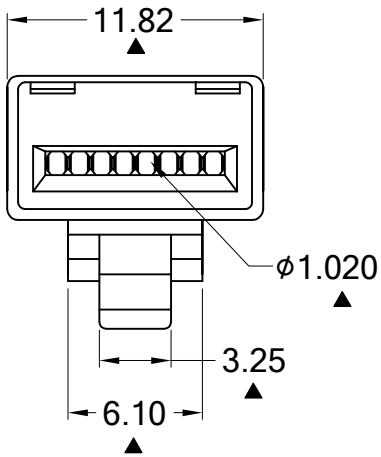

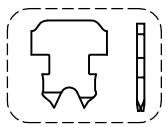

A : stranded wire

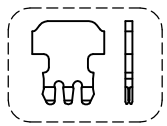

H : solid wire

SPECIFICATION NOTES:

1.Electrical:

1.1 Voltage rating: 125 VAC RMS
1.2 Current rating: 1.5 A
1.3 Contact resistance: 50 milliohms max
1.4 Insulation resistance: 1000 megaohms min @ 500 VDC
1.5 Dielectric strength: 1000 VAC RMS 50Hz, 1MIN.

2.Mechanical:

2.1 Retention strength: 50N MIN FOR 60S±5S
2.2 Operating life: 750 CYCLES MIN
2.3 Insertion force: 30N MAX.

3.Material & finish:

3.1 Housing: PC UL94V-2 clean
3.2 Contact: copper alloy plated with gold
3.3 Shield: Brass plated with Nickel
3.4 Operating temperature: -40 ℃ to +80 ℃.

未注公差 (mm)	
X	±0.30
.X	±0.20
.XX	±0.15
.XXX	±0.05
	±2.0

Coorle Technology
TEL: 0769-81585156 FAX: 0769-81605156

核准 审查 绘图

TITEL 品名	PLUG
PART NO. 料号	
DATE 日期	2020/08/24
SCALE 比例	1:1
REV 版本	A.0
VIEW 视角	